# SLIM LED RECESSED LIGHTING

FIRE RATED **2 HOURS** UL-263 • Compliant to ULC / CAN S-101 standards | AVERAGE LIFETIME **50 000** HOURS | Intertek | ENERGY STAR | **DIMMABLE**

## FLP3G-8W-30K / 40K

### TECHNICAL SPECIFICATIONS

- Sizes : 3 7/8'' dia. x 2 1/4'' H
- Colours: WH-White, BK-Black
- 120 VOLTS / LED 8 WATTS
- 550 LUMENS
- Degrees Kelvin: 3000K, 4000K to choose with the selection button
- Beam angle: 38° / CRI : > 90
- 3 1/4'' hole to be drilled
- Closed endorsement, IC for insulated ceilings
- Approved for wet locations
- Operating temperature: from -30° to + 40°
- Junction box for hardwiring and driver included

### ACCESSORIES AVAILABLE

- Plaster frame **PF-314**
- 6 ft extension **FLP-EX6-CCT**

### RECESSED LIGHTING DIMENSIONS

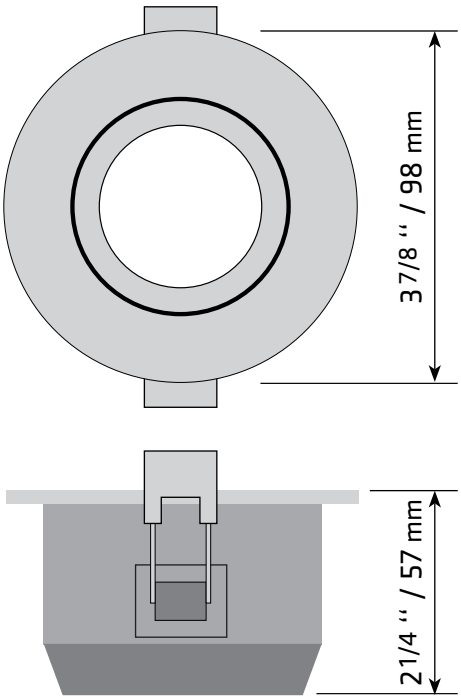


### JUNCTION BOX DIMENSIONS

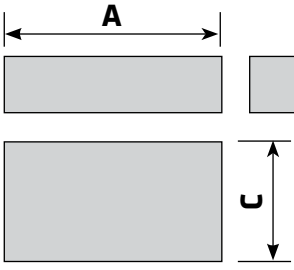


**A** : 4 3/4'' / 120mm
**B** : 1 1/4'' / 32mm
**C** : 2 5/8'' / 67mm

### LUMINOUS INTENSITY DISTRIBUTION DIAGRAM

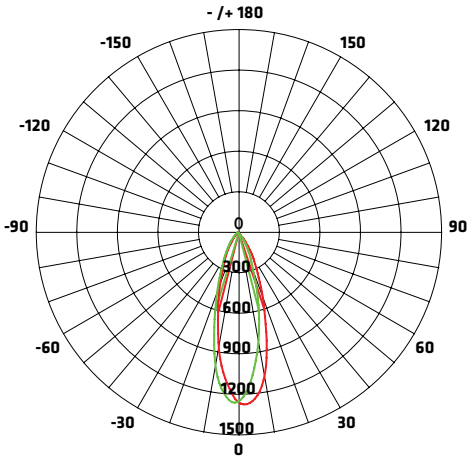


AVERAGE BEAM ANGLE (50%): 30.9°
Unit: CD — C0/180,31.7° — C90/270,30.1°

### FIGURE AAI

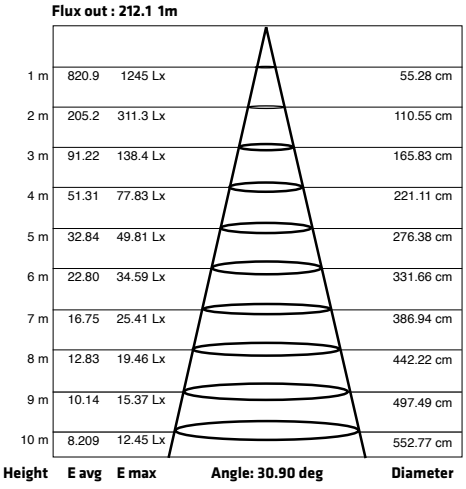


Note: The curves indicate the illuminated area and the average illumination when the luminaire is at different distance.


LUMIFARO
4300 Grande-Allée Blvd, Boisbriand
QC, Canada J7H 1M9

**450 979-0667**
info@lumifaro.com
www.lumifaro.com


| | |
|---|---|
| CLIENT: | |
| PROJECT: | |
| DATE: | |

# EASY INSTALLATION

## 1.

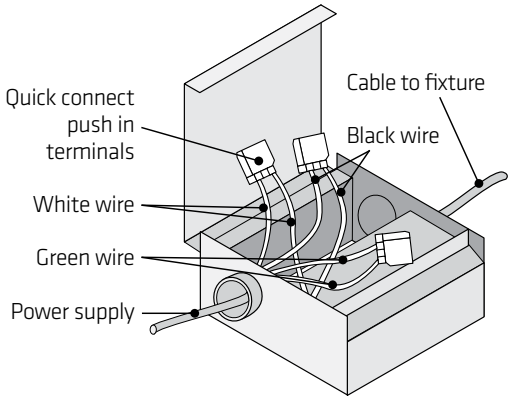


## 2.

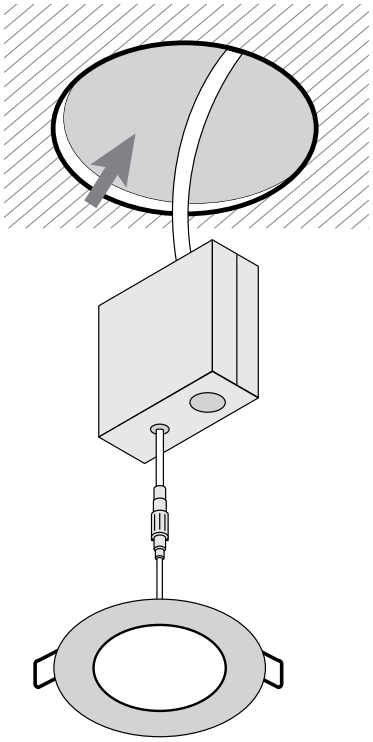

## 3.

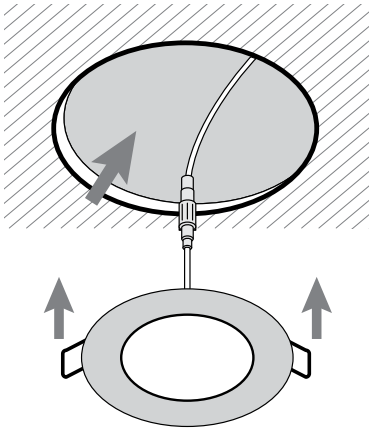

While our ultra-slim LED ceiling lights function with most dimmers and dimmers generally have a maximum 150-Watt rating for LED units, we strongly recommend that you not exceed 80% of this capacity in order to avoid lighting flicker when the dimmer is at its lowest setting. For example, we recommend a maximum of 8 6-inch units (120 Watts total) or 13 4-inch units (total 117 Watts).

CAUTION: ALWAYS CLOSE ELECTRICAL CURRENT BEFORE CONNECTING A LED DEVICE, otherwise the driver will be affected.