SLIM LED RECESSED LIGHTING

AVERAGE LIFETIME **50 000** HOURS | Intertek | **DIMMABLE**

FLP3G-7W-30K / FLP3G-7W-40K

TECHNICAL SPECIFICATIONS

- Sizes : 3 7/8'' dia. x 2 1/4'' H
- Colours:
  3000K: WH-White, BS-Brushed steel,
  4000K: WH-White
- 120 VOLTS / LED 7 WATTS
- 500 LUMENS
- Degrees Kelvin: 3000K / 4000K
- Beam angle: 38° / CRI : > 90
- 3 1/2'' hole to be drilled
- Approved for wet locations
- Operating temperature: from -30° to +40°
- Junction box for hardwiring and driver included

ACCESSORIES AVAILABLE

- Plaster frame **PF-314**

RECESSED LIGHTING DIMENSIONS

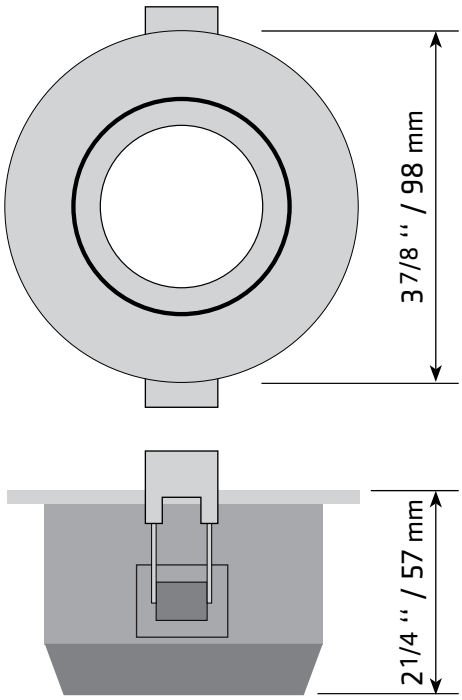

JUNCTION BOX DIMENSIONS

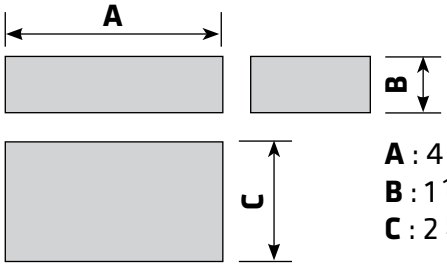

A : 4 3/4'' / 120mm
B : 1 1/4'' / 32mm
C : 2 5/8'' / 67mm

LUMINOUS INTENSITY DISTRIBUTION DIAGRAM

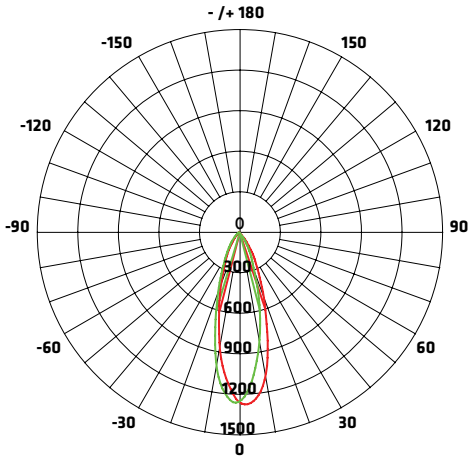

AVERAGE BEAM ANGLE (50%): 30.9°
Unit: CD — C0/180,31.7° — C90/270,30.1°

FIGURE AAI

Flux out : 212.1 1m

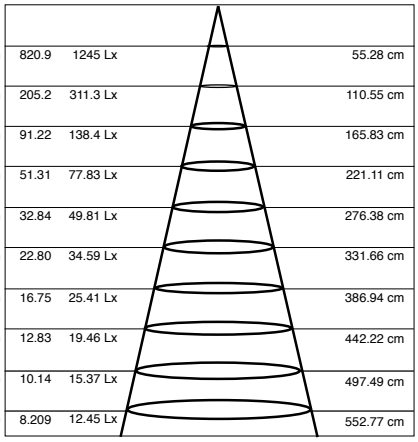

Height	E avg	E max	Angle: 30.90 deg	Diameter
1 m	820.9	1245 Lx		55.28 cm
2 m	205.2	311.3 Lx		110.55 cm
3 m	91.22	138.4 Lx		165.83 cm
4 m	51.31	77.83 Lx		221.11 cm
5 m	32.84	49.81 Lx		276.38 cm
6 m	22.80	34.59 Lx		331.66 cm
7 m	16.75	25.41 Lx		386.94 cm
8 m	12.83	19.46 Lx		442.22 cm
9 m	10.14	15.37 Lx		497.49 cm
10 m	8.209	12.45 Lx		552.77 cm

Note: The curves indicate the illuminated area and the average illumination when the luminaire is at different distance.

LUMIFARO
4300 Grande-Allée Blvd, Boisbriand
QC, Canada J7H 1M9

450 979-0667
info@lumifaro.com
www.lumifaro.com

CLIENT:	
PROJECT:	
DATE:	

EASY INSTALLATION

1.

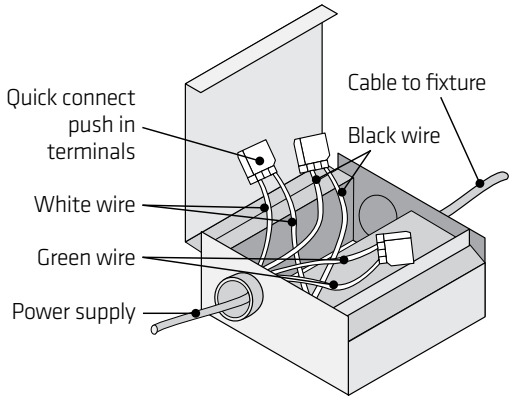

2.

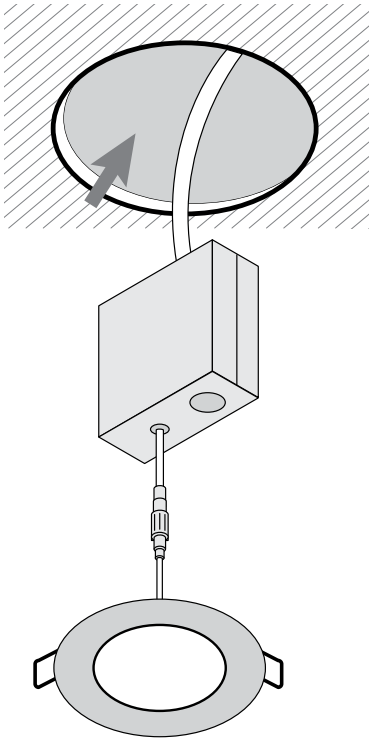

3.

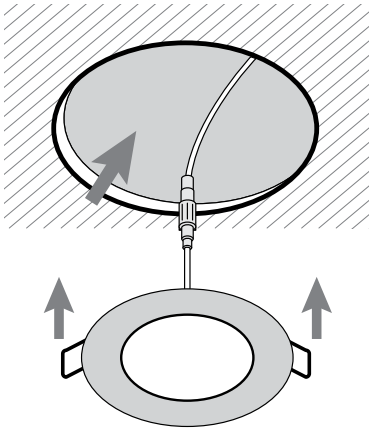

While our ultra-slim LED ceiling lights function with most dimmers and dimmers generally have a maximum 150-Watt rating for LED units, we strongly recommend that you not exceed 80% of this capacity in order to avoid lighting flicker when the dimmer is at its lowest setting. For example, we recommend a maximum of 8 6-inch units (120 Watts total) or 13 4-inch units (total 117 Watts).

CAUTION: ALWAYS CLOSE ELECTRICAL CURRENT BEFORE CONNECTING A LED DEVICE, otherwise the driver will be affected.